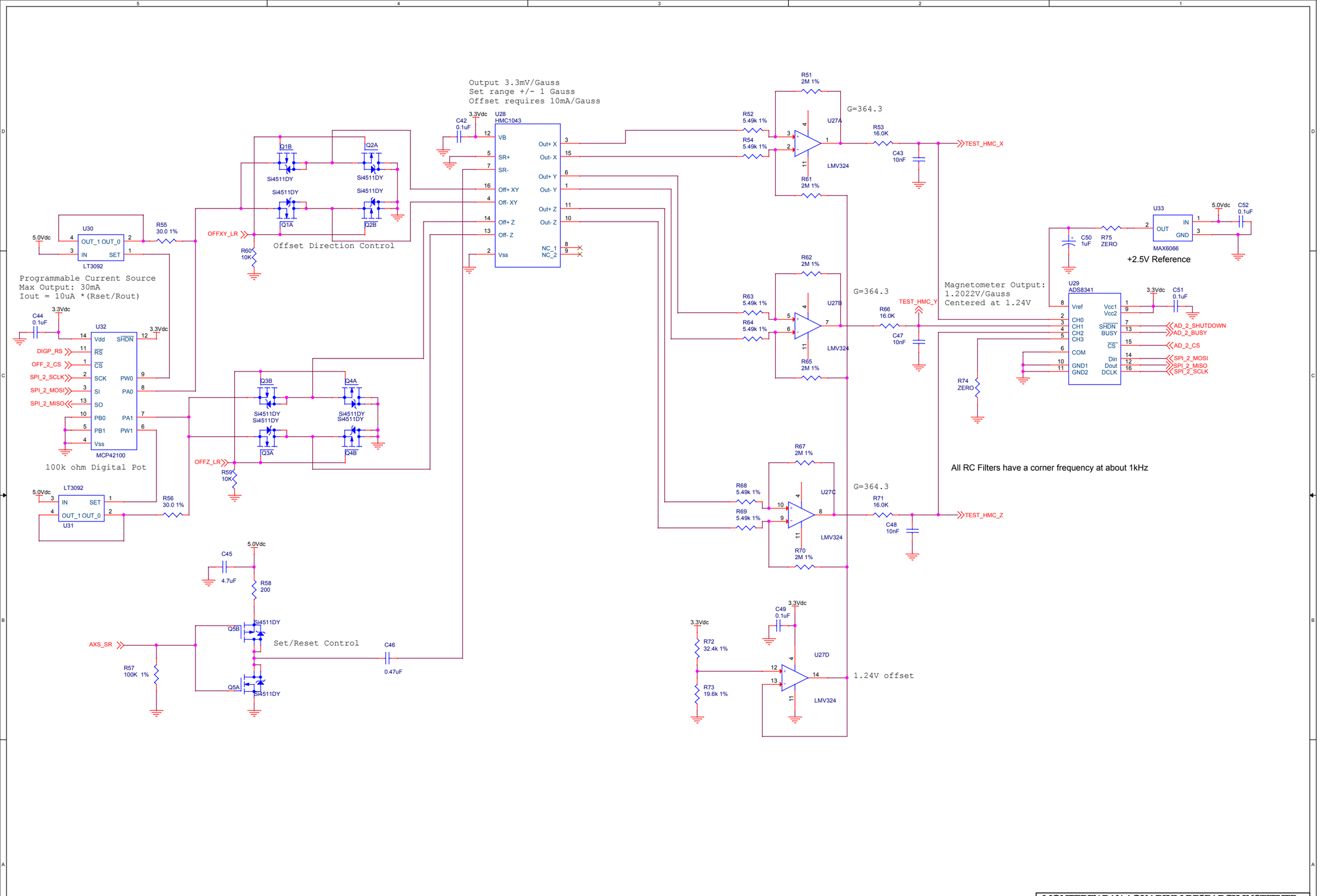

MONTEREY BAY AQUARIUM RESEARCH INSTITUTE
7700 SANDHOLDT ROAD
MOSS LANDING, CA 95039
(831) 775-1700 www.mbari.org

Copyright MBARI 2000

Title FOCE Chassis Environmental Board			Number 10020577
Size C	Engineer Chad Kecy	Layout <Layout Eng.>	Filename <Filename>	Rev A
	Date: Monday, August 02, 2010	Sheet 4 of 5	